UTILCELL
LOAD CELLS - WÄGEZELLEN

MODEL 300
5kg ... 500kg

- Bending beam load cell
- Fully Stainless Steel
- 3000 / 6000 divisions OIML R60 class C
- Hermetically sealed, fully welded
- Protected IP 68 (EN 60529) and IP 69K (ISO 20653)
- Available in ATEX version (optional) Zone 0-1-2 (gas) and 20-21-22 (dust)

- Biegestab-Wägezelle
- Komplett in Edelstahl
- 3000 / 6000 Teile OIML R60 Klasse C
- Hermetisch dicht verschweißt
- Schutzart IP 68 (EN 60529) und IP 69K (ISO 20653)
- Erhältlich in ATEX -Ausführung (optional) Zone 0-1-2 (Gas) und 20-21-22 (Staub)

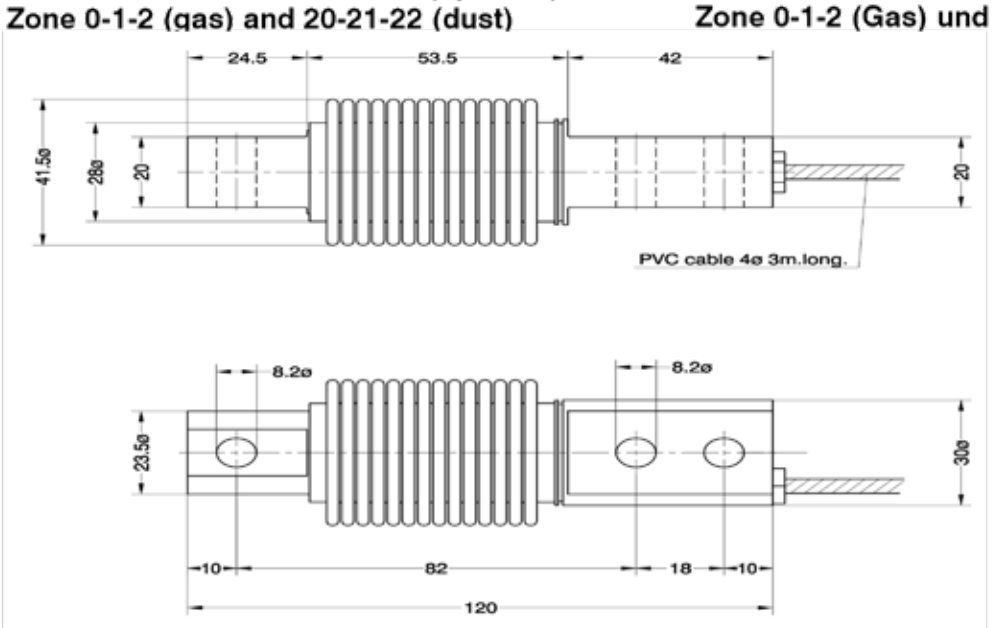

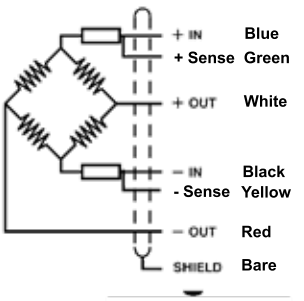

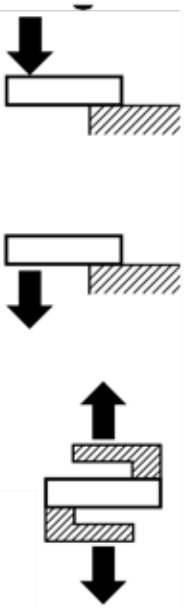

SPECIFICATIONS			
Nominal capacities (Ln)	5-10-20-30-50-75-100-150-200-250-300-500	50-75-100-150-200-250	kg
Accuracy class	3000	6000	n. OIML
Minimum dead load	0	0	%Ln
Service load	150	150	%Ln
Safe load limit	200	200	%Ln
Total error	< ±0.017	< ±0.008	%Sn (1)
Repeatability error	< ±0.015	< ±0.01	%Sn
Temperature effect:			
on zero	< ±0.01	< ±0.005	%Sn/5 °C
on sensitivity	< ±0.006	< ±0.003	%Sn/5 °C
Creep error (30 minutes)	< ±0.016	< ±0.008	%Sn
Temperature compensation	-10...+40	-10...+40	°C
Temperature limits	-30...+70	-30...+70	°C
Nominal sensitivity (Sn)	2 ±0.1%	2 ±0.1%	mV/V (2)
Nominal input voltage	10	10	V
Maximum input voltage	15	15	V
Input impedance	400 ±20	400 ±20	Ω
Output impedance	350 ±3	350 ±3	Ω
No load output	< ±2	< ±2	%Sn
Insulation resistance	> 5000	> 5000	MΩ
Maximum deflection (at Ln)	0.2-0.4	0.2-0.4	mm

Authorized Utilcell Distributor

Scales & Weighing Solution LLC

Https://theloadcelldepot.com
www.loadcellexpress.com
201-674-5761